LG Electronics Inc.

LG

DISHWASHER
SERVICE MANUAL

NOTE

BEFORE SERVICING THE UNIT, PLEASE READ THIS MANUAL CAREFULLY FOR SAFETY AND CORRECT SERVICES.

P/No. : 3828ED3001J

MODEL : LD-205 Series

CONTENTS

1. CAUTION 4

2. SPECIFICATIONS 5

3. FEATURES & TECHNICAL EXPLANATION 6

4. PARTS NAME 8

5. WIRING DIAGRAM 9

6. PROGRAM CHART (SCHEMATIC DIAGRAM) 10

7. HOW TO DISASSEMBLE 11

8. TROUBLE SHOOTING METHODS 18

A. TROUBLE SHOOTING ACCORDING TO DISPLAYED ERROR MESSAGE 18

B. TROUBLE DIAGNOSES AND REPAIR BY SYMPTOM 20

9. INSTALLATION INSTRUCTION 24

10. EXPLODED VIEW 29

11. REPLACEMENT PART LIST 35

CAUTION !

■ DISCONNECT POWER CORD BEFORE SERVING

■ RECONNECT ALL GROUNDING DEVICES

IMPORTANT SAFETY NOTICE !

This service information is intended for individuals possessing adequate backgrounds of electrical, electronic and mechanical experience.
Any attempt to repair this appliance may result in personal injury and property damage.
The manufacturer or seller can not be responsible for the interpretation of this information, nor can it assume any liability in connection with its use.

2. SPECIFICATION

ITEM	SPECIFICATION		
Rated Voltage / Frequency	AC 220V/50Hz	AC 230V/50Hz	AC 240V/50Hz
Installation	Free Standing / built-In		
Place Settings	12		
Product Dimension(mm)	600(W)× 600(D)× 850(H)		
Product Weight(Kg)	52		
Door Colour	White / Stainless / Titanium		
Tub Material	Stainless Steel		
Control	Electronic		
Rated Power(Watt)	2,210		
Heater Power(Watt)	2,100		
Programs	6		
Upper Rack Position	Adjustable		
Lower Rack	100% Fold down		
Water Consumption(ℓ)	14.0 (Economy)		
Power Consumption (kWh)	0.95 (Economy)		
Operating Time (min)	Except Drying : 86(Except Drying):Economy		
Fan Dry System	Yes		
Delay Start Function	Yes		
Auto-Off Power Switch	Yes		
Process Monitor	Yes		
Wash Level	5		
Racks	Nylon Coating		
Operating Water Pressure (Bar)	0.5 ~ 8		

3. FEATURES & TECHNICAL EXPLANATION

3-1 New Technology Introduction

3-1-1. Turbo Fan Drying System

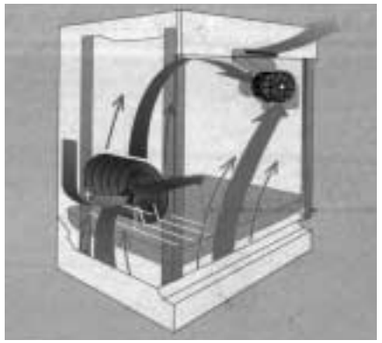

- Turbo fan drying system expels out hot and humid air to enhance quick and effective drying.
- With air mixing vent system, it expels out low temp. steam and prevents dew drop to outside of dishwasher.

3-1-2. High Temperature Rinsing

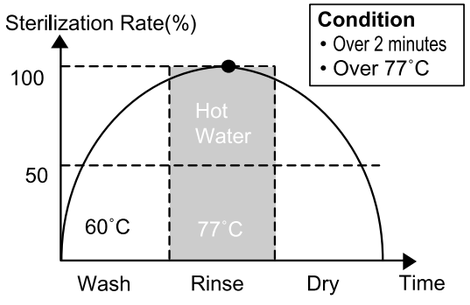

- During the high temp. Rinse course, water temperature in an dishwasher reaches 77°C, considerably higher than the average rinse temperature in conventional dishwashers(65°C). This is how Rinse 77°C can eliminate some bacteria such as salmonella.

3-1-3. Turbo Spray System

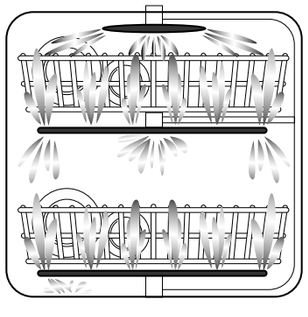

- Turbo Spray System is elaborately designed to achieve a more powerful and efficient wash. You can see the excellent 3 rotating spray arm with 5 directional waterjet.

3-2. Display Panel

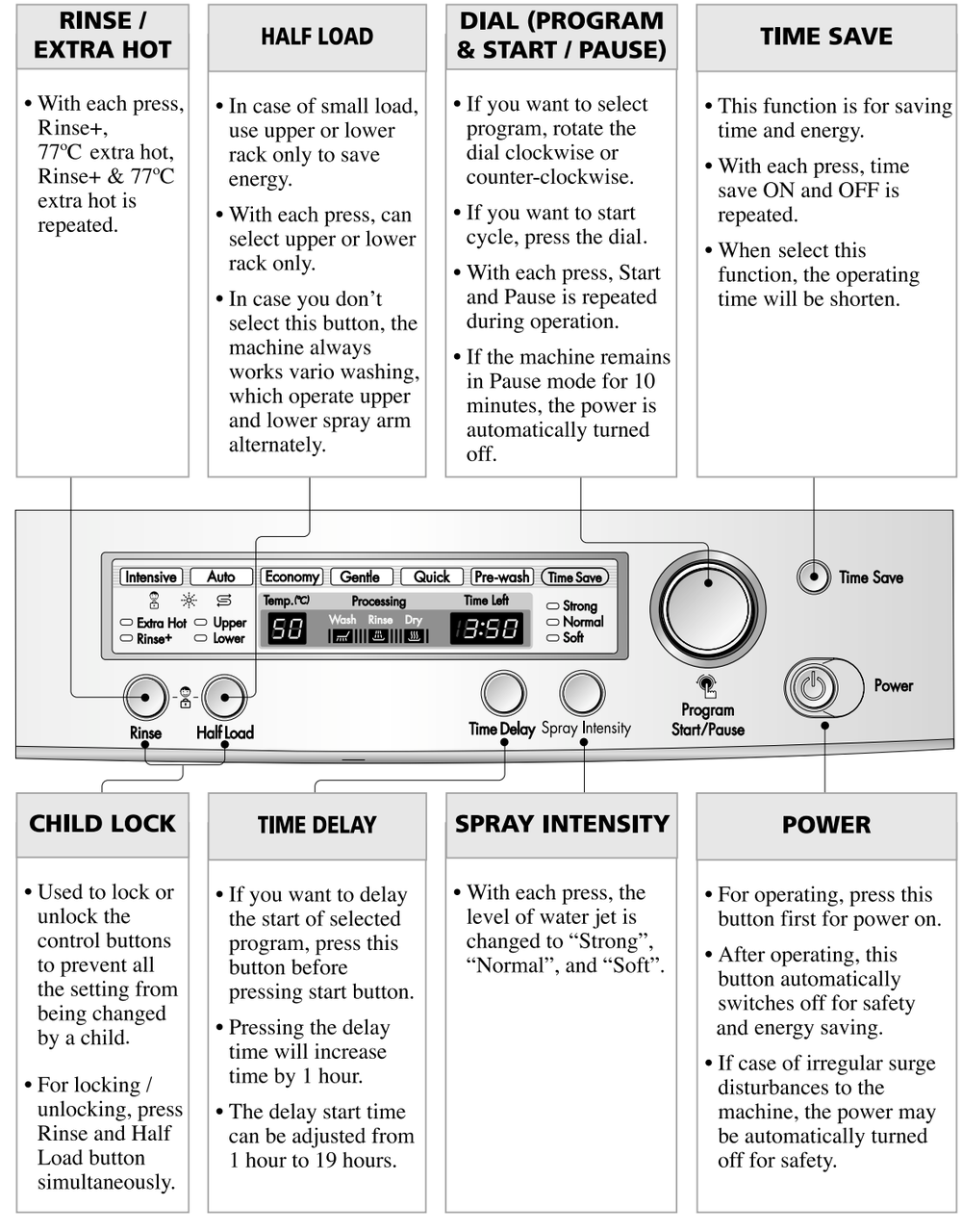

4. PARTS NAME

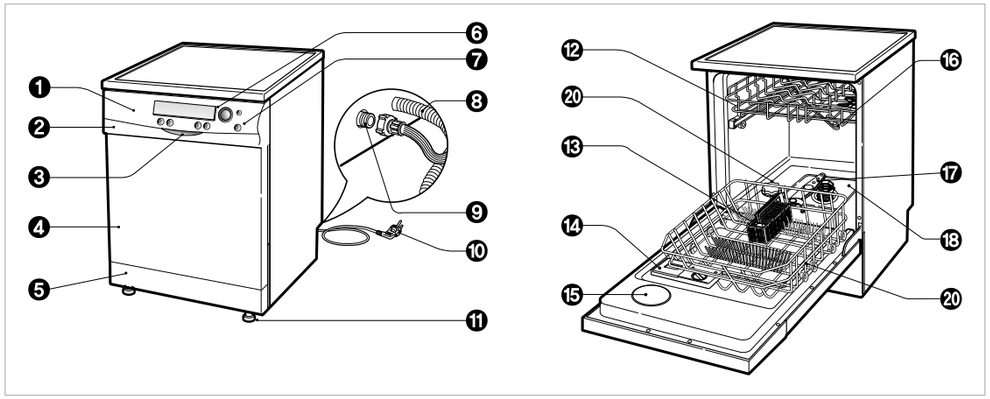

1. Control Panel
2. Vapor vent
3. Door Handle
4. Front Cover
5. Lower Cover
6. Process Monitor
7. Power Switch
8. Drain hose
9. Inlet valve ASM
10. Power Cord
11. Adjust Leg
12. Upper Rack
13. Cutlery Rack
14. Detergent & Rinse Aid Dispenser
15. Vapor Vent Cover
16. Upper Spray Arm
17. Lower Spray Arm
18. Filter ASM
19. Lower Rack
20. Salt Container Cap

Accessories

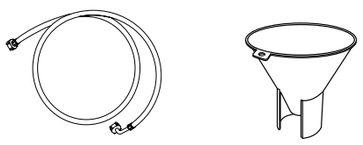

5. WIRING DIAGRAM

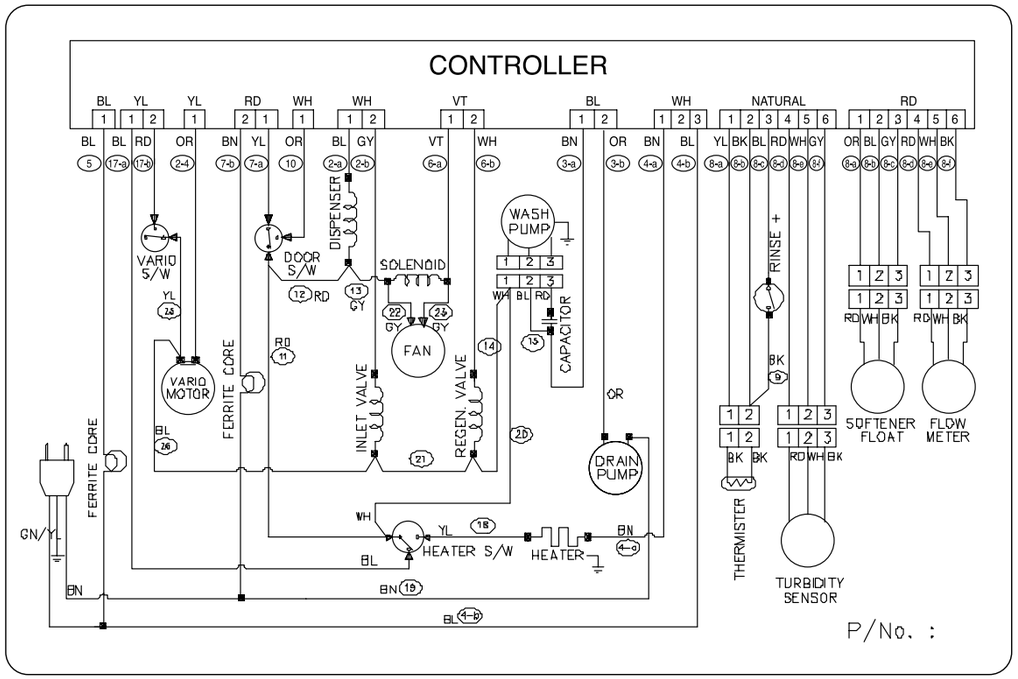

6. PROGRAM CHART(SCHEMATIC DIAGRAM)

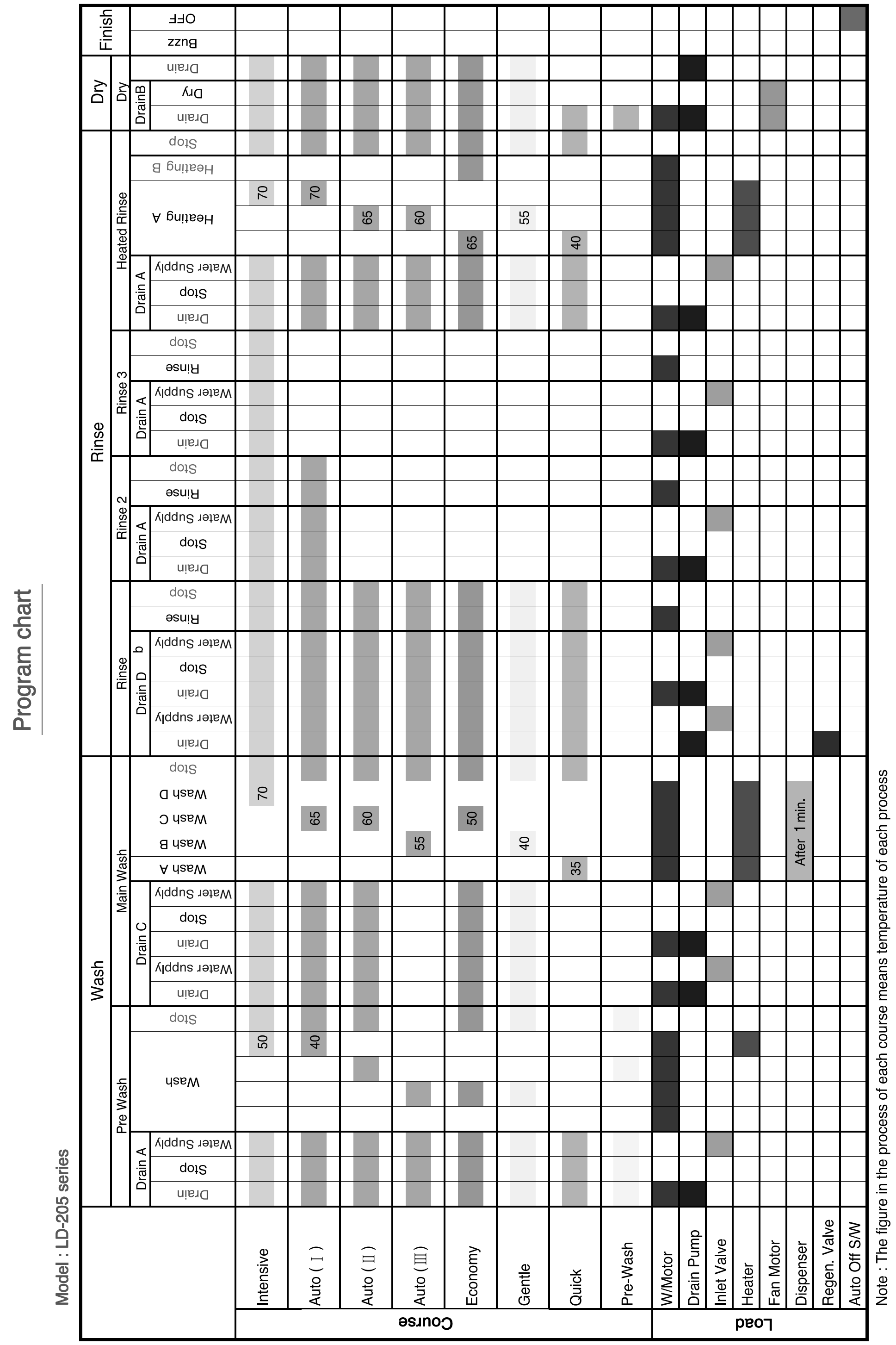

7. HOW TO DISASSEMBLE

BEFORE DISASSEMBLING THE DISHWASHER ;

1) Close the Water Tap (faucet).
2) Remove all dishes and items in the dishwasher.
3) Remove the Lower Rack and the Upper Rack.
4) In case of the water softner assembly model, open the water softner cap to flow out the water to sump and drain to avoid the floor wet.
5) Remove the plug from electric outlet to avoid electric shock.
6) If necessary, remove the inlet hose and drain hose to avoid the hose damages.
7) Prepare some towels to avoid floor wet by the water left in the dishwasher.

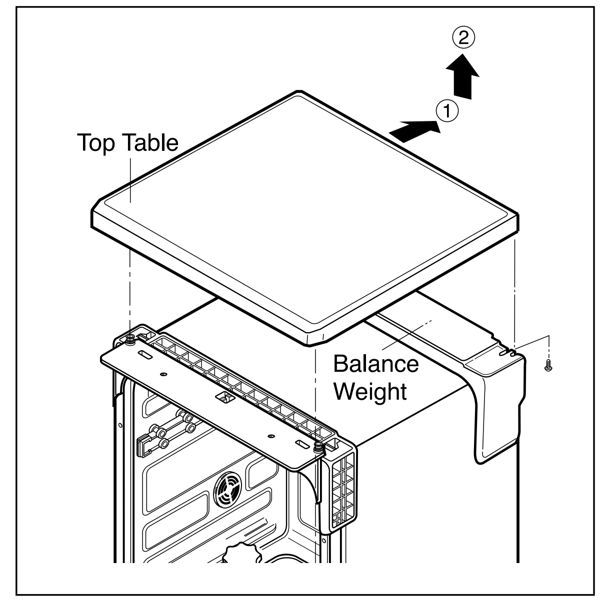

1. Top Table

1) Remove the rear 2 screws.
2) Pull and lift the top table.

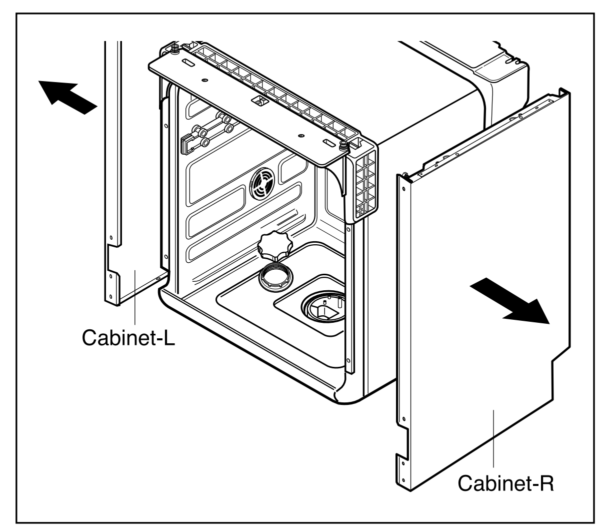

2. Cabinet-R

1) Remove front 4 screws (stainless).
2) Remove rear 3 screws.

3. Cabinet-L

2) Remove front 4 screws (stainless).
3) Remove rear 3 screws.

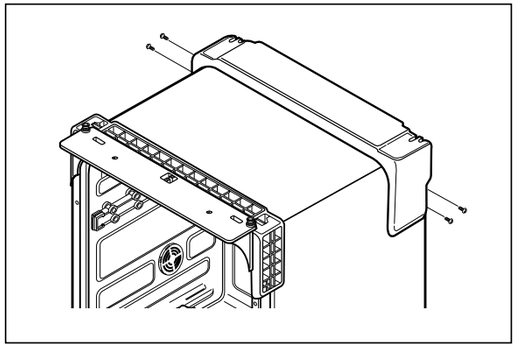

4. Balance weight

1) Remove side 4 screws.
2) Lift the balance weight.

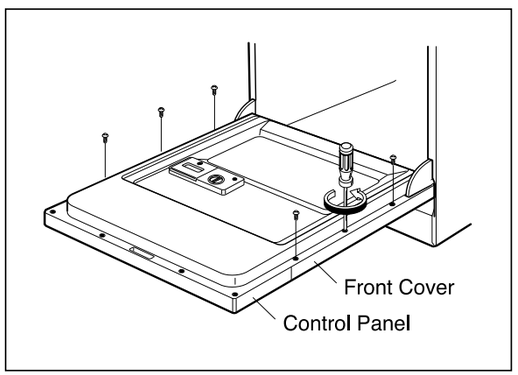

5. Front Cover

1) Open the door.
2) Remove 6 screws (stainless).
3) Close the door slowly and remove Front Cover downwards.

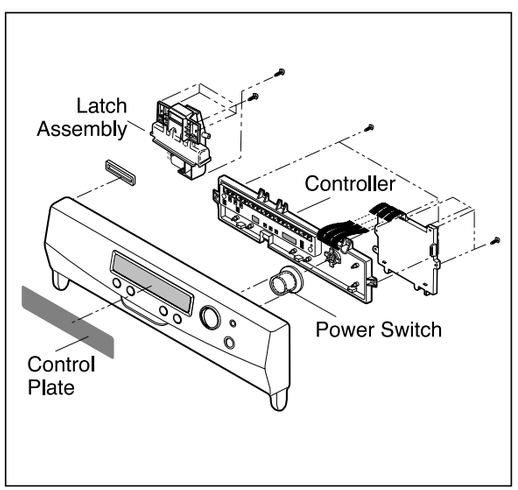

6. Control Panel Assembly

1) Open the door.
2) Remove 4 screws (stainless).
3) Remove wire connections.

> Be sure the wiring should not be changed in reassembling.

4) Remove 3 screws for Latch assembly
5) Remove 5 screws for Controller.

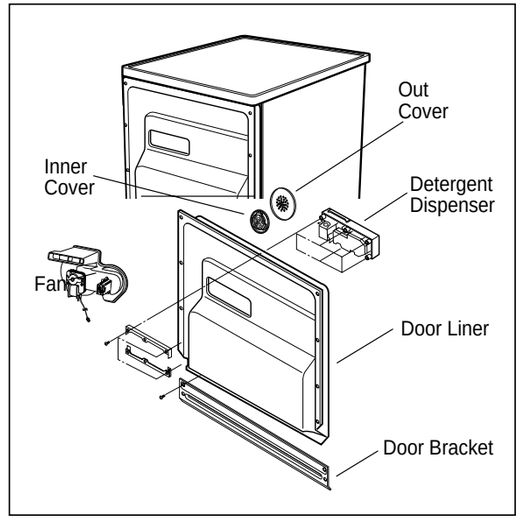

7. Detergent Dispenser

1) Close the door.
2) Remove the wire connections.
3) Remove 6 screws with brackets.

8. Fan

1) Open the door
2) Remove the outer cover.
3) Remove 2 fixing screws inside and turn the Inner Cover counter - clockwise.

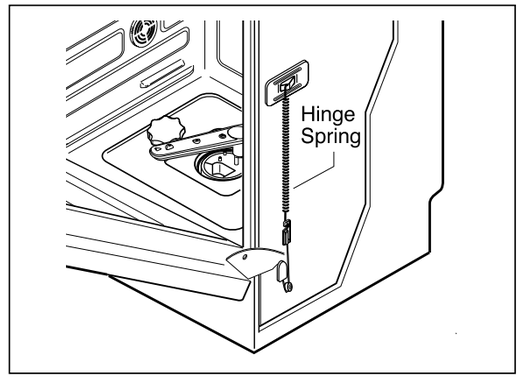

9. Door Spring (Right & Left)

1) Push the Spring upwards and take it off from the Frame.

> Be careful not to be injured by the sharp edge of Tub.

2) Take the Hinge Link off from the Hinge.

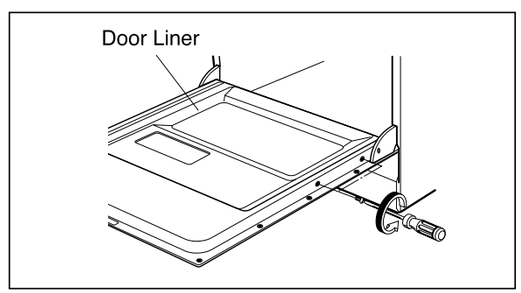

10. Door Liner

1) Open the door.
2) Remove 4 screws.

> Do not use other screws for assembling.

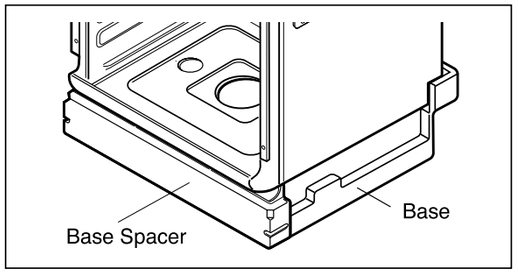

11.Base spacer

1) Remove 4 screws.
2) Lift the front side of dishwasher and pull the base spacer forward.

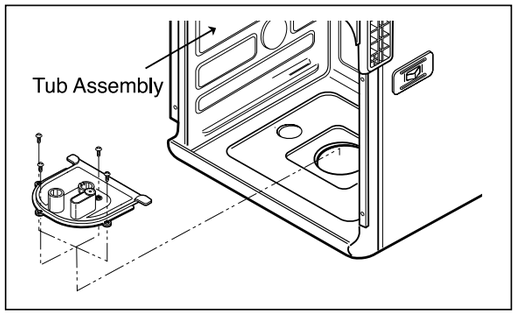

12. Nozzle-L holder

1) Disconnect the water guide
2) Remove 4screws and lift it up

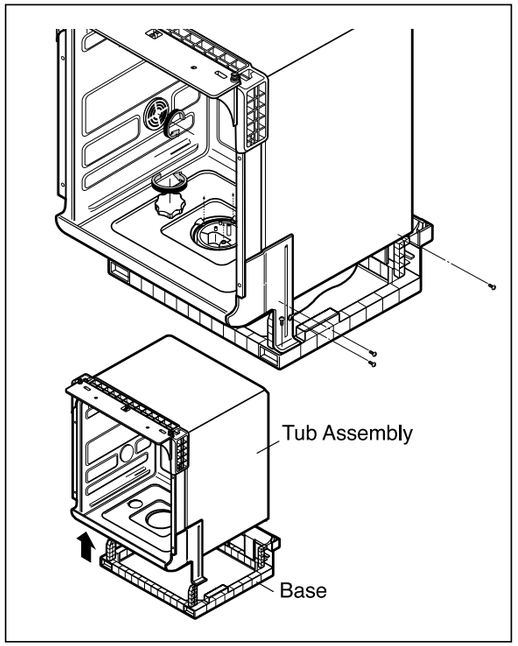

13. Tub assembly

1) Turn the air guide nut, water softner nut counter-clockwise.
(Special tool might be needed.)

Be careful the rubber packing of air guide assembly should not be lost.

2) Remove 3 screws for sump holder .
3) Remove side 6 screws.
4) Remove Earth screw of right side.
5) Lift tub assembly upward.
(Be sure water softner is not blocked.)

Be careful not to be injured or scratch floor by the sharp edge of tub.

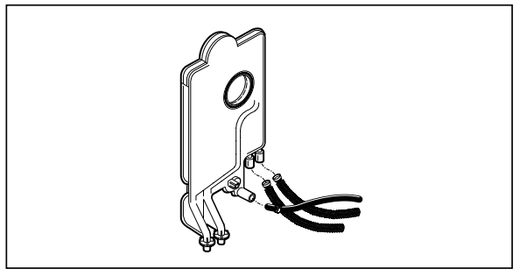

14. Air guide assembly

1) Disconnect the wiring connection.
2) Remove 3 hose assembly.

Be careful the o-ring should not be lost.

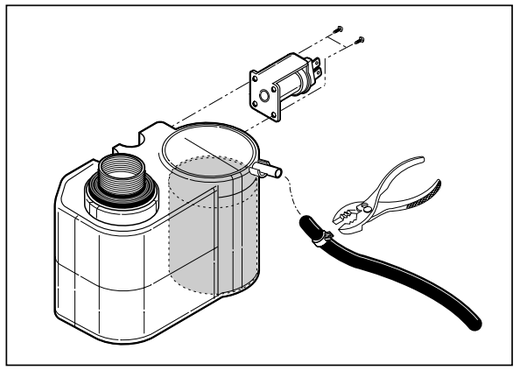

15.Water softner

1) Remove the hose assembly.
2) Lift it upward.

Be careful not to wet the floor by the water left in the water softner.

3) You can disassemble the regeneration. valve by unscrew the 2 screw.

Be sure not to lost the spring and bobbin.

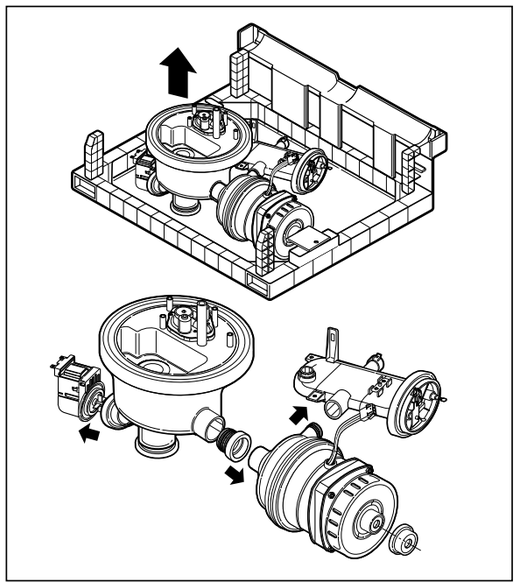

16. Washing motor, Heater assembly, Drain motor & sump

1) Remove the screw which tighten washing motor and base.
2) Lift them upward.

Be careful not to wet the floor by the water left in the sump.

3) Detach the washing motor and heater assembly by pulling opposite direction to sump.
4) Remove the 3 screw for drain motor.

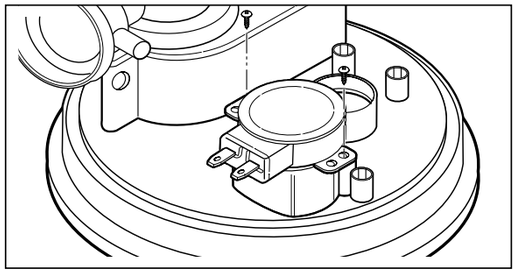

17. synchronous motor

1) Remove the 2 screws.

Be careful not to change the location of cam.

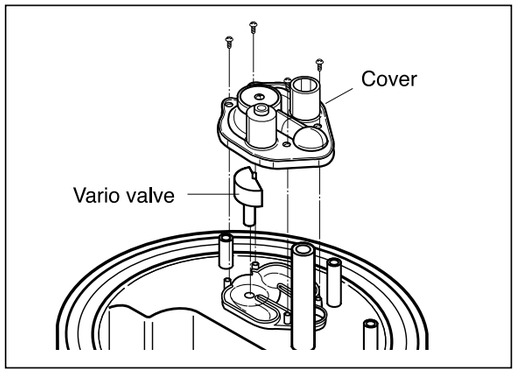

18. Vario valve

1) Remove 4 screws and lift the cover upward.
2) Lift the vario valve upward.

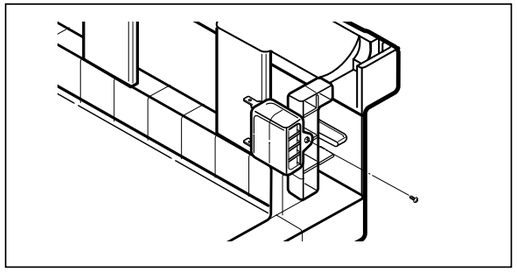

19. Capacitor

1) Remove 1 screw.

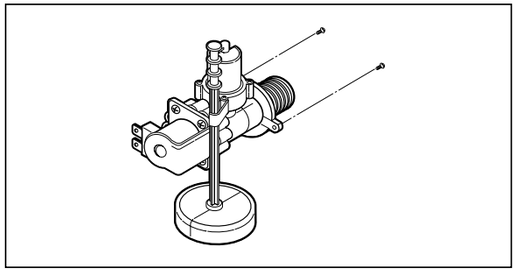

20. Inlet valve

1) Remove 2 screw.

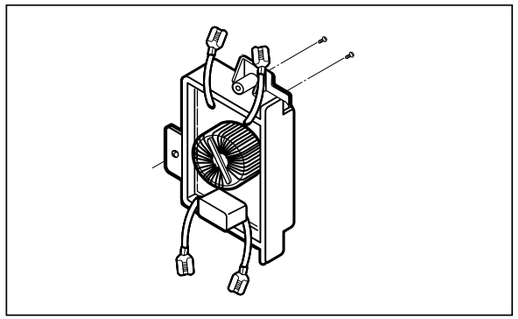

21. Noise filter

1) Remove 2 screw.

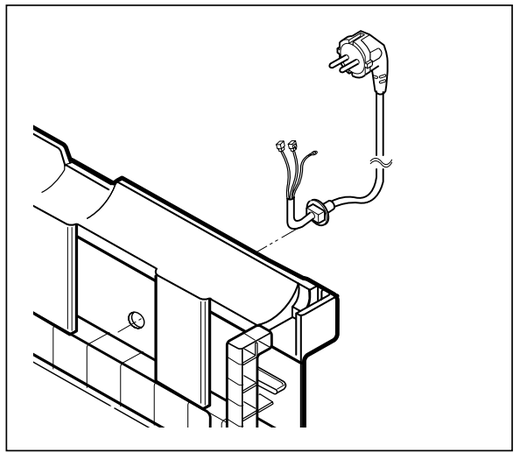

22. Power cord assembly

1) Turn the power cord assembly 90ºC and take it off.

THE ASSEMBLING SHOULD BE DONE IN ACCORDANCE WITH THE REVERSE ORDER OF DISASSEMBLING.

8.TROUBLE SHOOTING METHODS

A. TROUBLE SHOOTING ACCORDING TO DISPLAYED ERROR MESSAGE

ERROR MESSAGE	POSSIBLE CAUSE FOR ERROR OCCURRENCE	REMEDY
INLET ERROR IE displayed **Condition** Not reached to the normal water level in spite of 10 min. water supply	¥ The Water Tap is not opened. ¥ The Inlet Hose is kinked. ¥The Filter of inlet valve clogged by impure water. ¥ The Inlet Water Valve is normal ? ¥ The water pressure is very low. (below 0.3 kgf/㎠) ¥Inlet valve is blocked by safety device for leakage sensing.	¥ Open the Water Tap. ¥ Repair the Inlet Hose. ¥a) Close the Water Tap. b) Unscrew the Inlet Hose (Inlet Valve side) c) Clean the Filter of Inlet Valve. ¥ Replace or repair the Inlet Valve. ¥Check the water remain on the base. 1) Check the point of damages and repair or replace the related parts. 2) Disconnect the inlet hose to dishwasher to unlock the safety valve.
DRAIN ERROR OE displayed **Condition** Not fully drained out in spite of 5 min. drain operation	¥ The Filter clogged. ¥ The Drain Hose kinked or blocked. ¥ The Drain Pump/Motor or circuit is troubled.	¥ Clean the Filter. ¥ Remove the cause of kink or block. ¥Replace the Drain Pump/Motor or repair the Circuit.
LEAKAGE ERROR E1 displayed **Condition** The water level in Tub goes down during operation	¥Water leakage in Hose connections. ¥Water is leaked by damages.	¥ Replace the connections of Hose. ¥Check the point of damages and repair or replace the related parts.

ERROR MESSAGE	POSSIBLE CAUSE FOR ERROR OCCURRENCE	REMEDY
EXCESS ERROR FE displayed **Condition** Excessive water is supplied than normal water level.(Automatically drain Pump operated.)	¥ The machine is inclined. ¥ The Inlet Valve is troubled. ¥ The Air Tube is kinked or blocked. ¥ The Controller is troubled.	¥Level the machine using adjustable legs. ¥ Replace the Inlet Valve. ¥ Remove the cause of kink or block. ¥ Repair or replace the Controller.
THERMAL ERROR tE displayed **Condition** The resistance of thermistor not normally out put.	¥ The Circuit of thermistor is troubled. ¥ Thermistor is troubled. ¥ The Controller is troubled.	¥ Repair the Circuit of thermistor. ¥ Replace the Thermistor. ¥ Repair or replace the Controller.
HEATER ERROR HE displayed **Condition** The water is not heated or the temperature in the Tub is overheated to over 95¡	¥ The Circuit of Heater is troubled. ¥ The Thermistor is troubled. ¥ The Heater is shorted. ¥ The Relay Circuit is troubled.	¥ Repair the Circuit of Heater. ¥ Replace the Thermistor. ¥ Replace the Heater. ¥ Repair the Relay Circuit..

B. TROUBLE DIAGNOSES AND REPAIR BY SYMPTOM

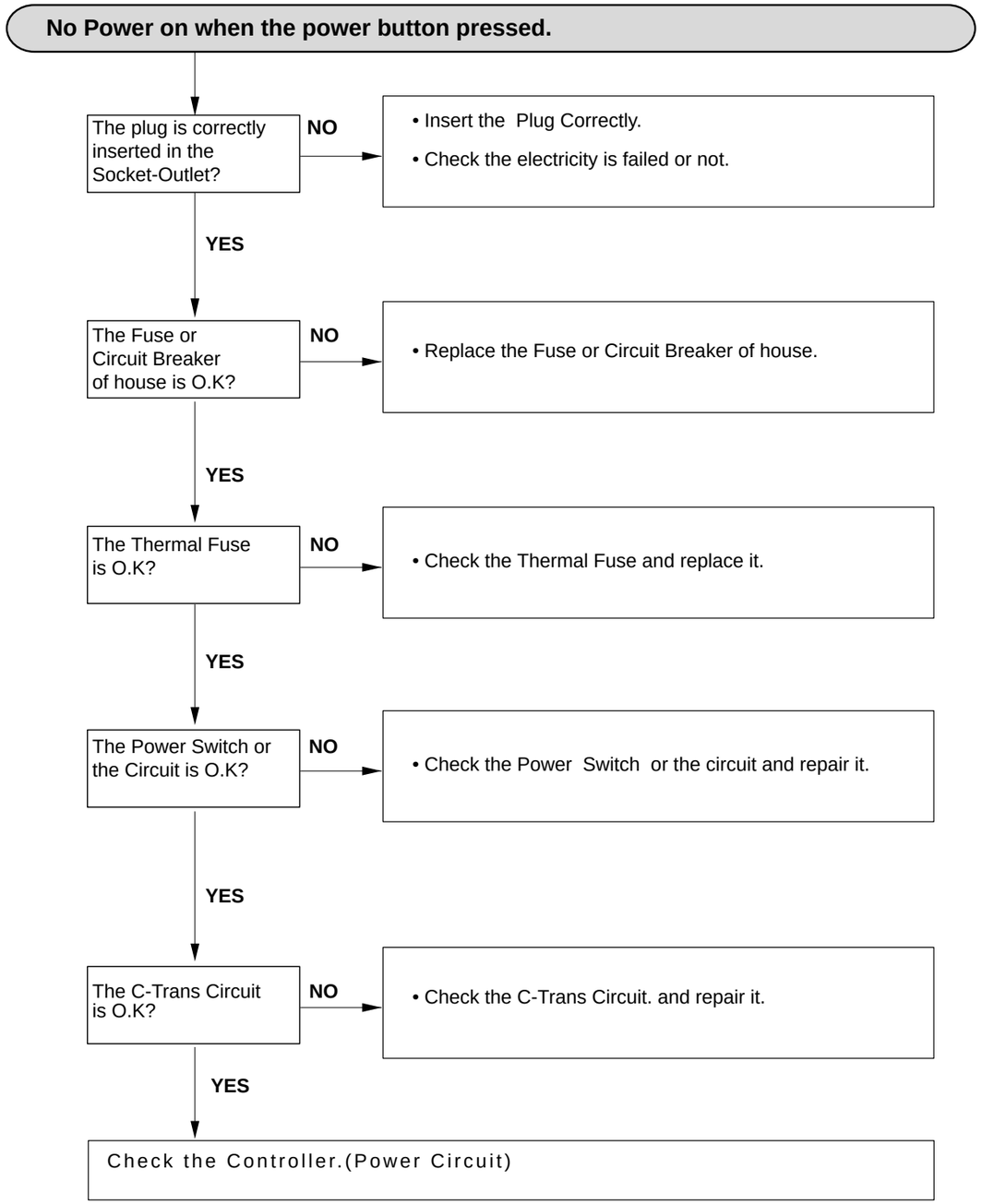

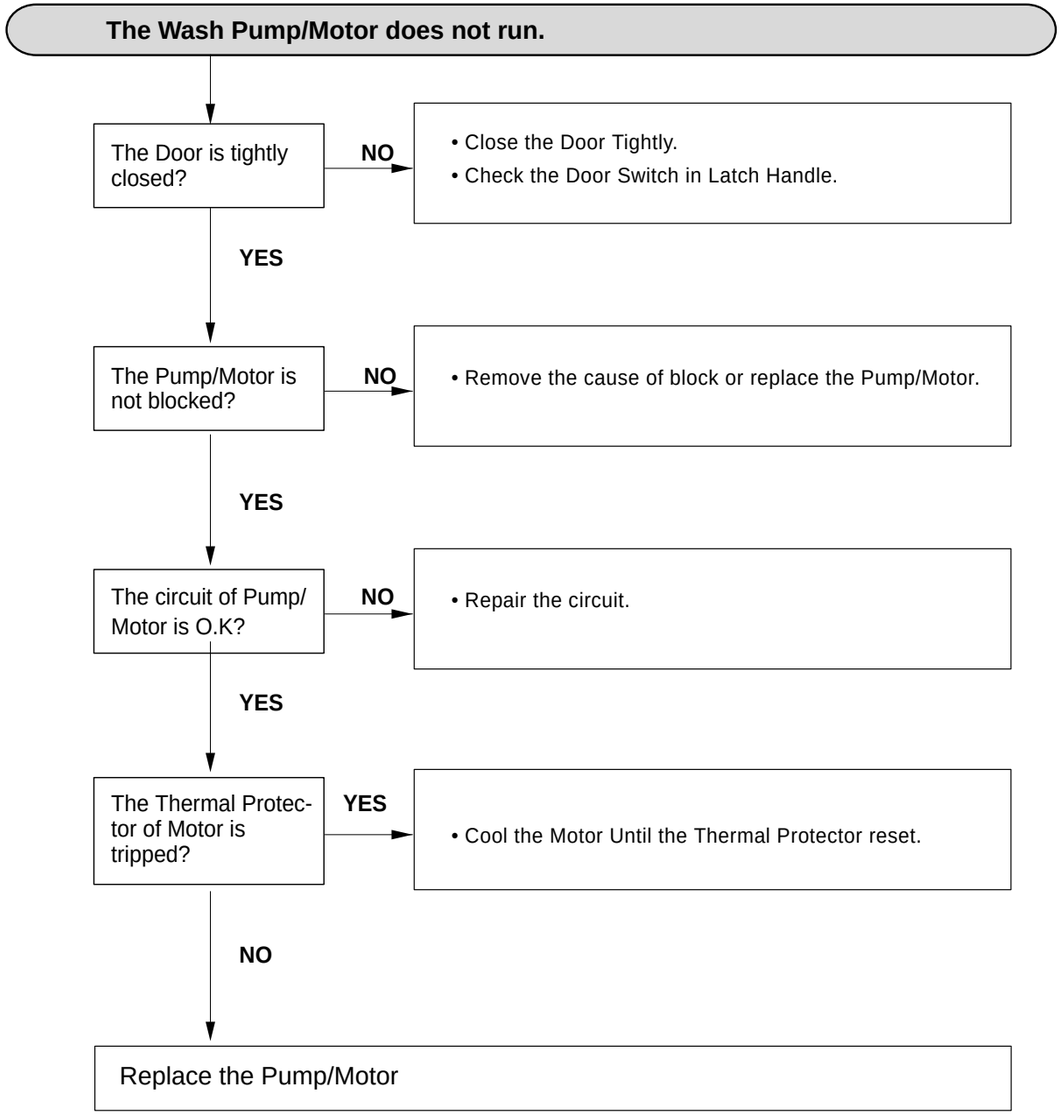

Washing Results are not Satisfactory

After washing, are there still White deposits or streaks on the dishes?

YES →

- Reduce the amount of Rinse-Aid (for Streak)
- Does salt refill lamp blink? (Refill salt)

NO ↓

After washing, are there still food soils on the dishes?

YES ↓

Check that :
- the amount of detergent Correctly used or not
- Filters clogged or not.
- the holes of spray arms blocked or not.
- Utensils are correctly arranged or not.
- Utensils are overloaded or not.
- the spray arm rotating is obstructed or not.
- the program is correctly selected or not.

Dry Results are not satisfactory

Increase the amount of Rinse-Aid.(Set the number higher)

↓

Select the Program that the Rinse temperature is higher.

Power Button not automatically off after operation.

Check the button is blocked by foreign materials.

↓

Check the Power Switch.(Replace it, if necessary.)

↓

Check the Controller.(Replace it, if necessary.)

9. INSTALLATION INSTRUCTION

Step1: Prepare Cupboard opening

1. This dishwasher is designed to fit to the size shown as below.
2. Select a location as close to sink as possible for easy connections to water and drain lines.
3. The dishwasher should not be installed more than 3 meters from sink for proper drainage.
4. If dishwasher is to be installed in corner, minimum 5 cm of space is required between the washer and an adjacent cabinet or a wall.

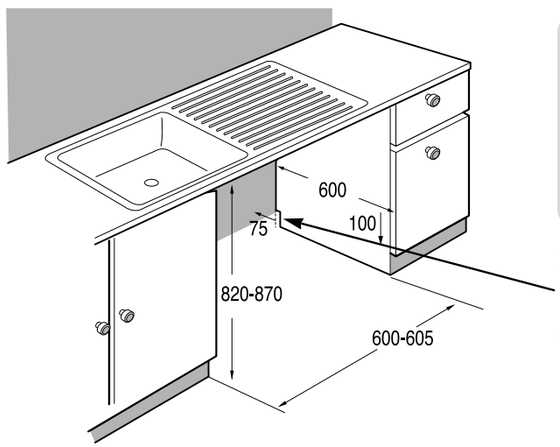

Cupboard Opening Dimension
(mm)

If bare chipboard is adjacent to or above the dishwasher, it should be sealed with a waterproofing paint or sealant to prevent swelling due to steam.

Cut out for hoses and electrical cables on either side.
(approx.. 100 X 75)

n Ensure the floor under the dishwasher is at the same level as the rest of the room to allow for any service requirements.

Step 2 : PREPARE ELECTRICAL WIRING

CAUTION

For personal safety, remove house fuse or open circuit breaker before installation.

Do not use an extension cord or adapter plug with this appliance.

Electrical and grounding connections must comply with the national electrical code/provincial and municipal code and/or other local codes.

1. This appliance must be supplied with correct rating voltage and hertz as shown on instruction manual, and connected to an individual, properly grounded branch circuit, protected by minimum 15 amp circuit breaker or time delay fuse.
   Wiring must be 2 wires with ground.
2. The power point must be in a accessible location adjacent to and not behind the dishwasher and within 1.2 meters of the dishwasher side. A correctly rated, wired and earthed extension cord may be used if necessary.
   (See Fig. A)
3. The power point must be correctly earthed, if in doubt, have it checked by a qualified Electrician. No other appliance shall be connected to the same plug outlet by a double adapter or similar plug.

Step 3 : PREPARE DISHWASHER FOR INSTALLATION

1. Lay the dishwasher on its back.
2. Adjust the legs to the needed height of cabinet as shown at below.

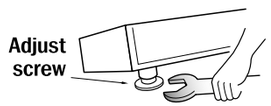

Step 4 : INSTALL THE DISHWASHER IN CUPBOARD

1. Before sliding the dishwasher into the cupboard opening, all necessary final height adjustment and balancing adjustment should be done using the spanner.
2. Slide the dishwasher into the cabinet opening carefully. Make sure that the drain hose inside the cabinet should not be kinked or exceeded.

CAUTION
If the height of cupboard is below 850mm, you should remove the top table by unscrewing the 4 screws. (Two of front

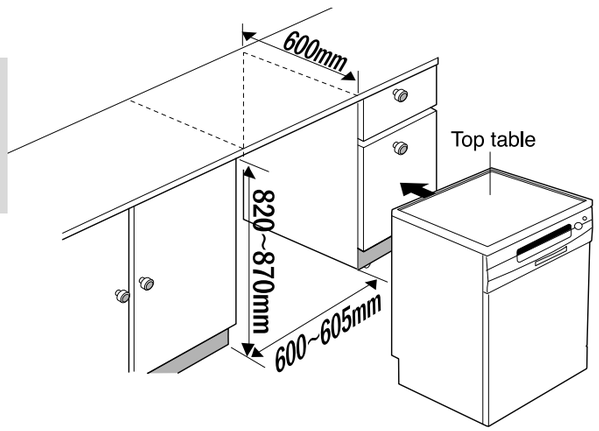

Step 5 : DRAIN LINE CONNECTION

1. If the end drain hose does not fit to the drain line, use a piece of rubber connector (not supplied) that must be resistant to heat and detergent and may be obtained from a plumbing shop.

2. There are 2 typical connections as shown in Figure A, B

¥The recommended methods of drain hose connection must be adhered to within the areas of Water Board Authority. Several other options are commonly used outside this area and local council or plumbers should be able to advise of these.

¥The S trap spigot must be drilled out cleanly and free of obstruction to its maximum internal diameter, if used for drainage.

¥To prevent syphoning, one of the following instruction methods must be followed :

■ When the drainage hose is connected to a sink S trap or waste disposal unit, the hose must be looped up to the under side of the bench top and secured.

Fig. A

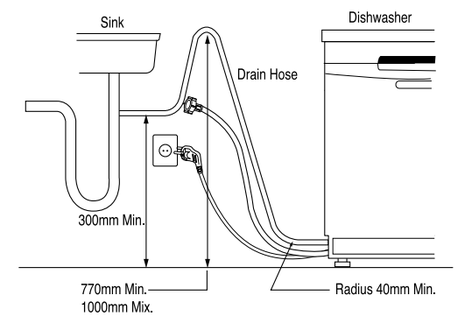

■ When the drain hose is connected to a separate stand pipe, it is essential that an air tight connection is made. Refer to Fig. B

Fig. B . Drainage connection-stand pipe

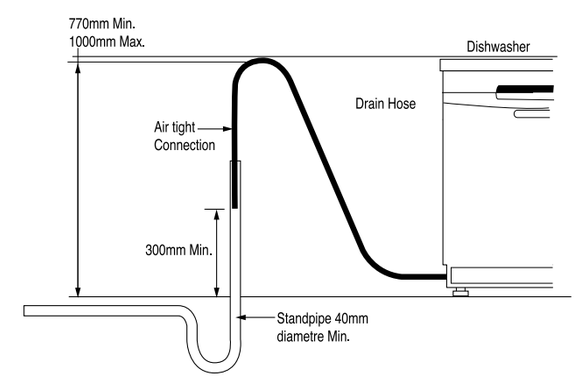

Drain Hose Extension

■ Drain Hose extension kits are available from through your local service centre.
Extend drain Hose as shown below.

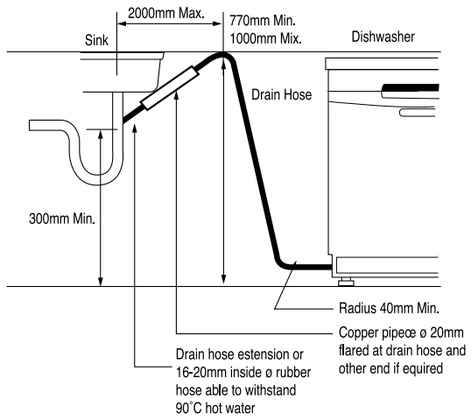

Step 6 : WATER SUPPLY CONNECTION

1. Connect the water supply hose to the valve behind dishwasher and the water tap as shown in figure.
   This dishwasher may be fed with either hot or cold water. If the water can not be maintained below 65°C, the dishwasher must be connected to cold water.
2. When connecting, the sealing tape or sealing compound should be used to avoid water leaks.

   Make sure that the line is not kinked or sharply bent.

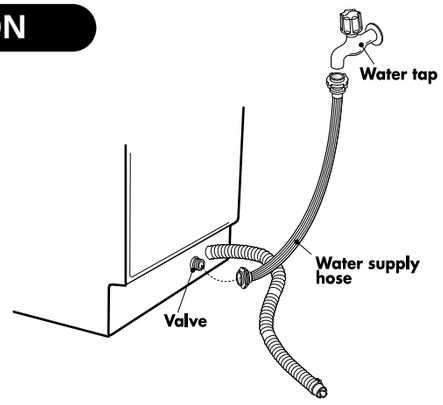

Step 7 : FINAL CHECK AND ASSEMBLING

1. Securely hand tighten supply hose to water supply.
   Plug power cord into an earthed power point and switch on.
2. Operate the dishwasher through one cycle (Quick cycle is recommended) to check for water leak and operating conditions.

10. EXPLODED VIEW

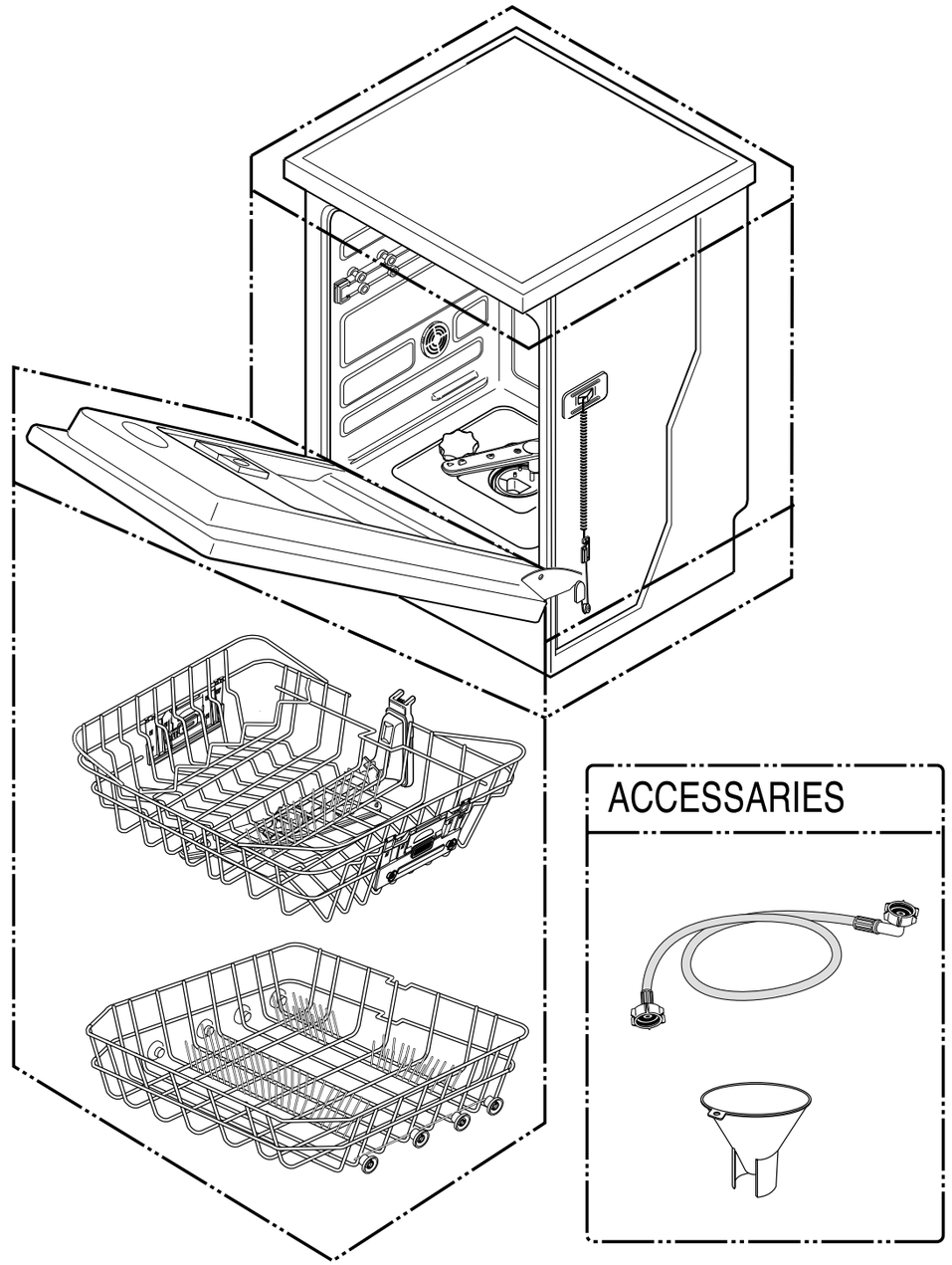

EXPLODED VIEW

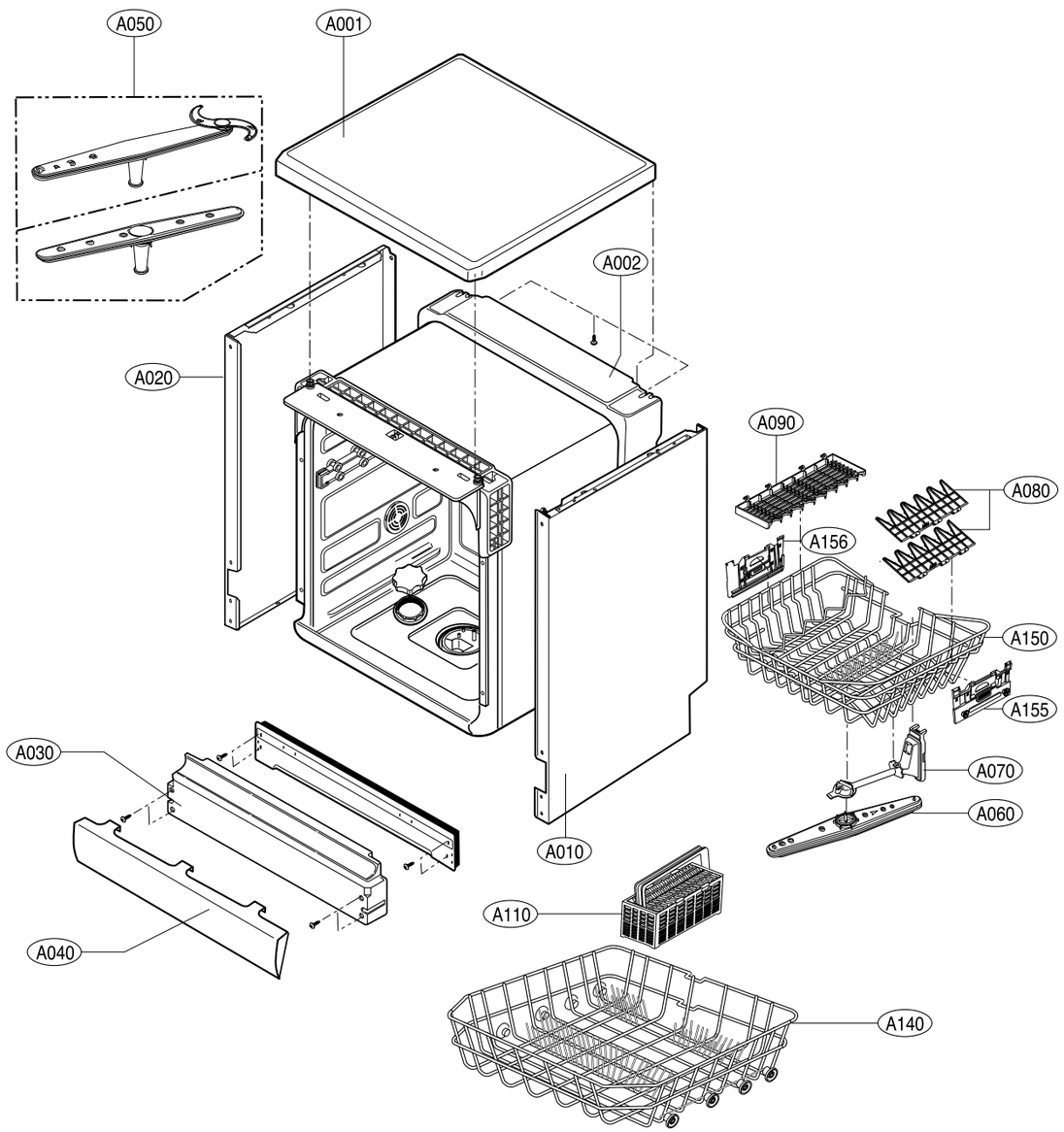

EXPLODED VIEW - TUB ASSEMBLY

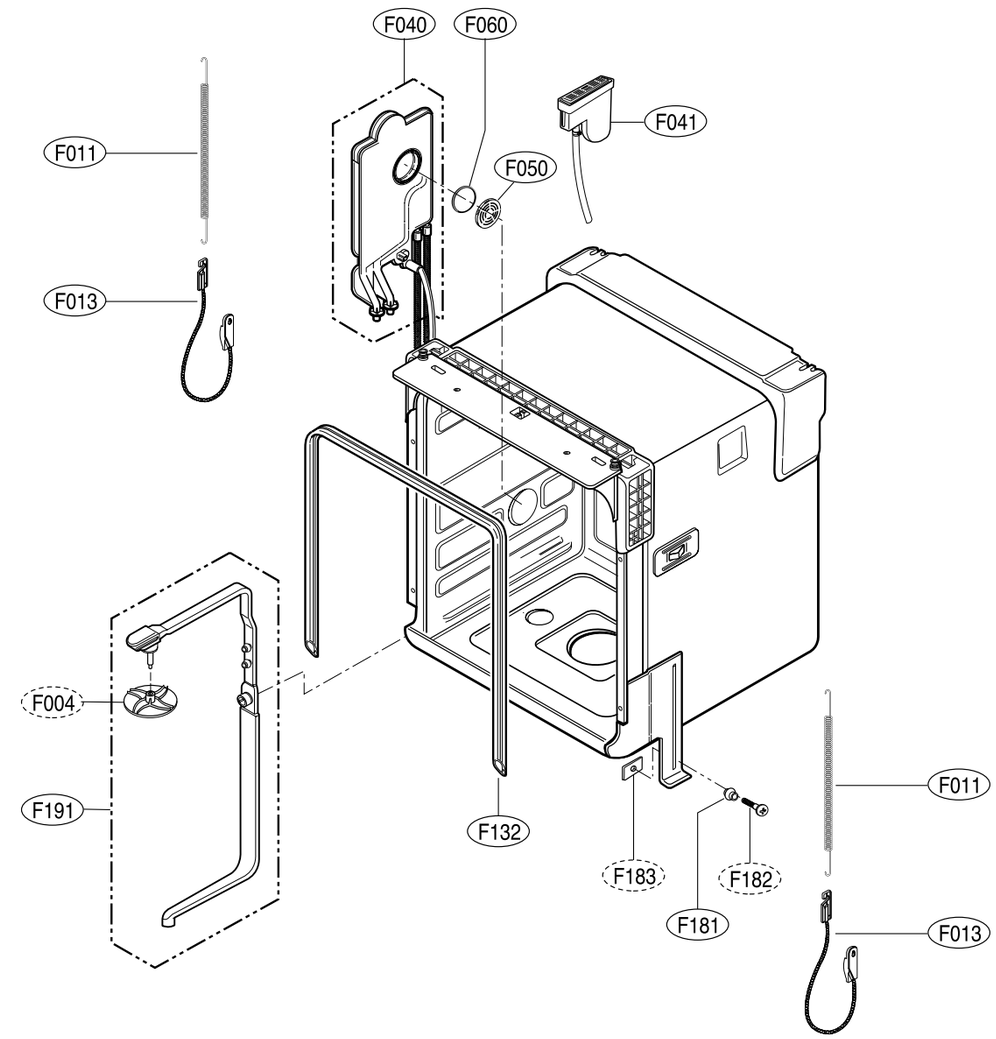

EXPLODED VIEW - SUMP ASSEMBLY

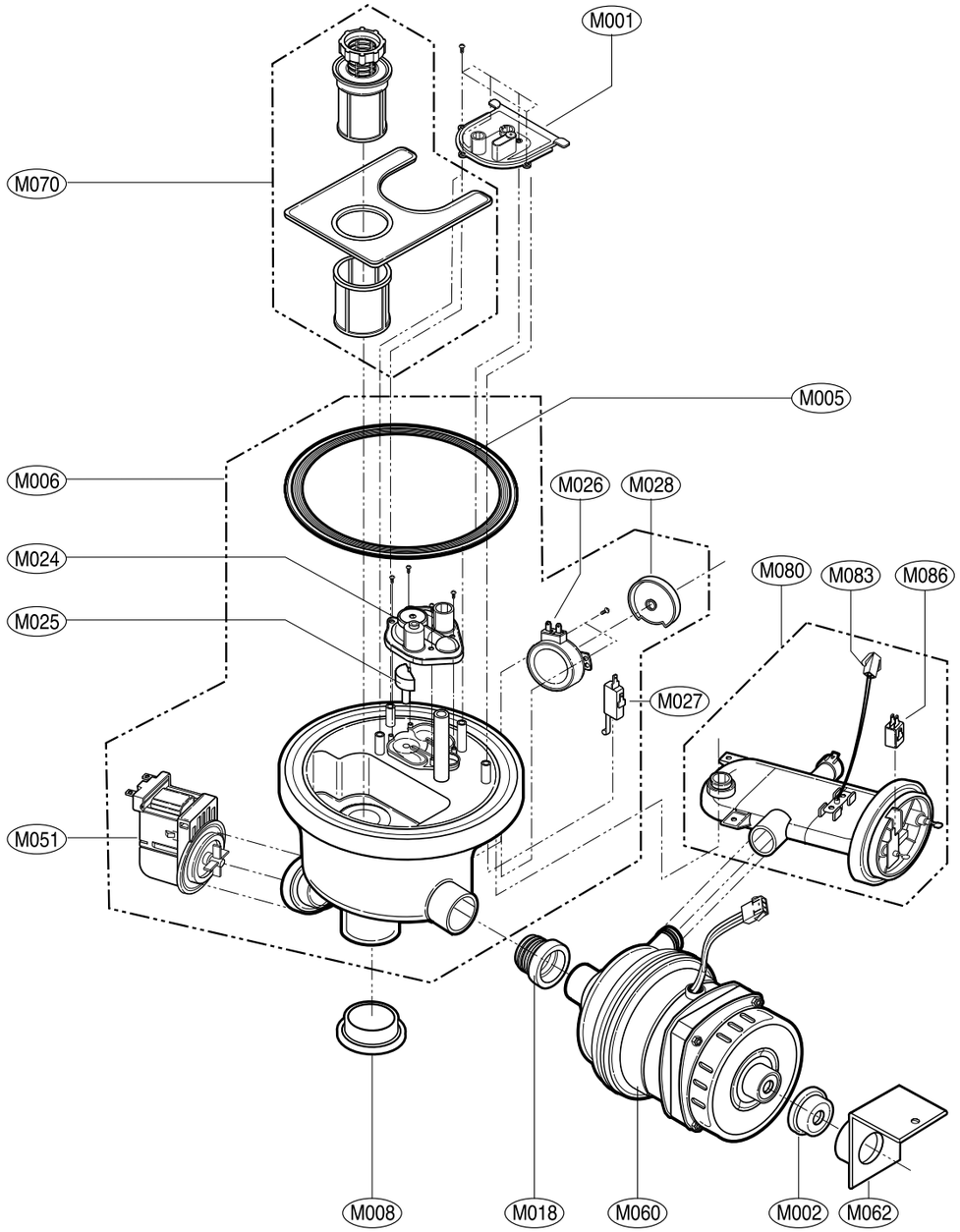

EXPLODED VIEW - BASE ASSEMBLY

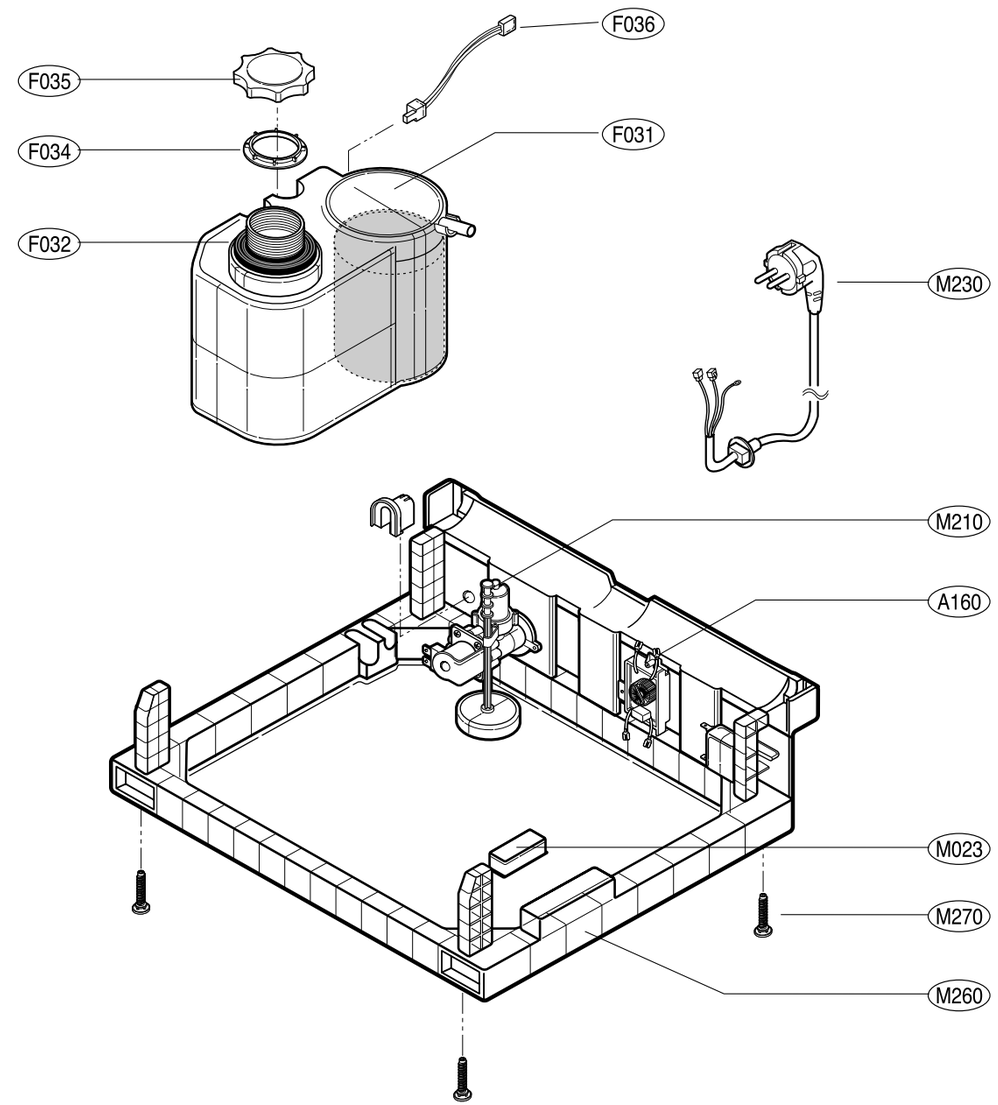

EXPLODED VIEW - DOOR ASSEMBLY

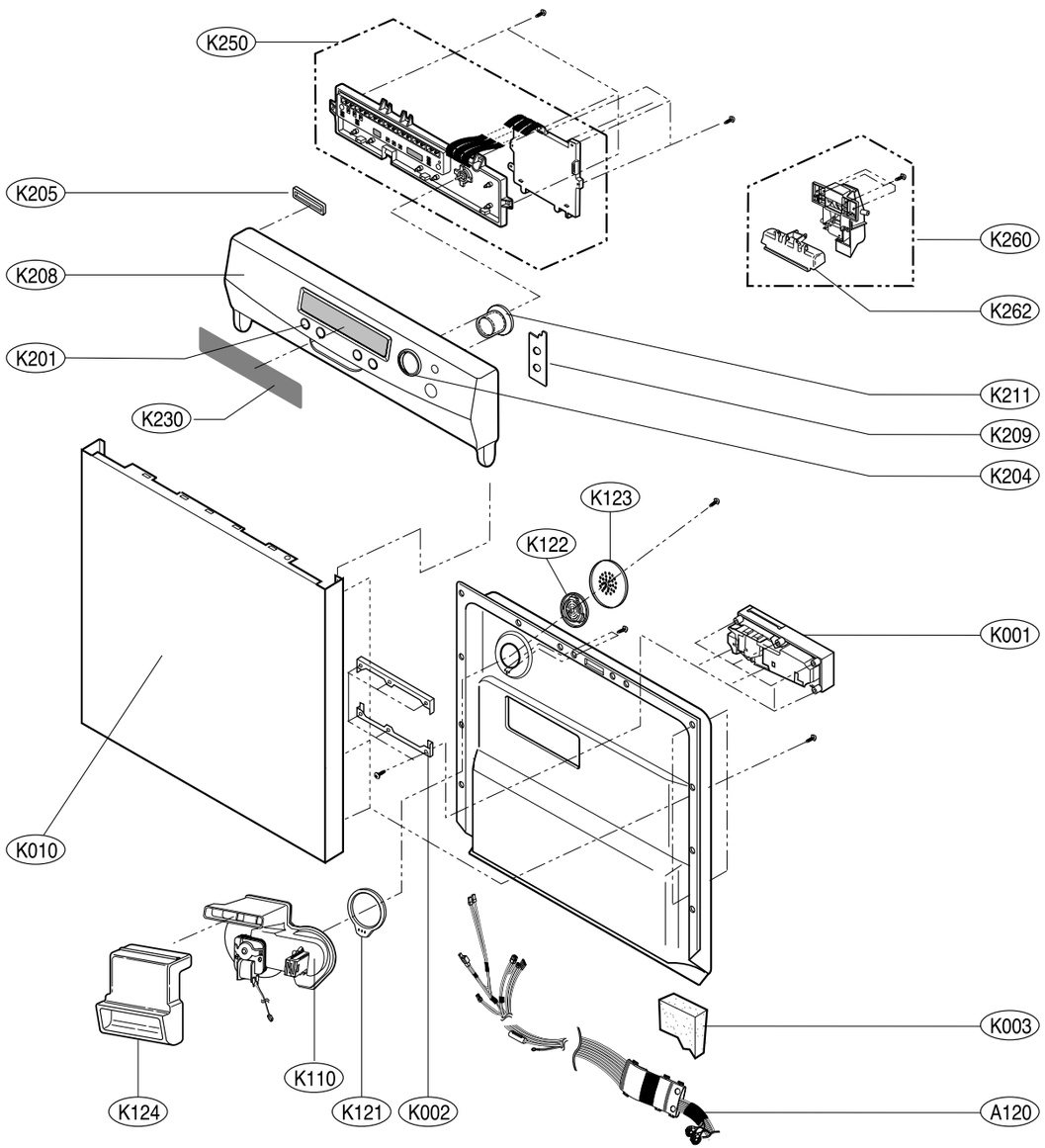

11. REPLACEMENT PART LIST

CAUTION : BEFORE REPLACING ANY OFTHESE COMPONENTS.
READ CAREFULLY THE SAFETY PRECAUTIONS IN THIS MANUAL

■ **NOTE : S**(SAFETY PARTS), **AL**(ALTERNATIVE PARTS)

No.	PART NAME	PART No.	SPEC&COLOR	Q'ty
*001	MANUAL ASSEMBLY, OWNERS	3829ED3001T	ENGLISH	1
		3829ED3001U	SPAIN / PORTUGAL	
		3829ED3001V	IRAN	
		3829ED3001W	GERMANY	
		3829ED3001X	ENGLISH/HUNGARY/ CROATIA	
*002	BOX, CARTON	3890EZ3314A		1
*003	MANUAL, SERVICE	3828ED3001J		0
A001	TOP PLATE ASSEMBLY	3301ER1001F	WHITE	1
		3301ER1001G	SILVER	
		3301ER1001E	TITANIUM	
A002	BALANCE WEIGHT	4866ED2003A		1
A010	CABINET-R	3112FD1079R	WHITE	1
		3112FD1079S	SILVER	
		3112FD1079T	MIDDLE NOBLE INOX	
A020	CABINET-L	3112FD1025R	WHITE	1
		3112FD1025S	SILVER	
		3112FD1025T	MIDDLE NOBLE INOX	
A030	BASE, CABINET	3040ED1001A		1
A040	COVER, LOWER	3550ED1001A	WHITE	1
		3550ED1001B	SILVER	
		3550ED1001G	NOBLE INOX	
A050	NOZZLE ASSEMBLY	5249FD1168C	NOZZLE-L	1
A060	NOZZLE ASSEMBLY	5249ED1003A	NOZZLE-U	1
A070	GUIDE ASSEMBLY	4975ED2003A	NOZZLE-U GUIDE	1
A080	RACK	3750FD2036C	CUP RACK	2
A090	RACK	3750ED2002C	KNIFE RACK	1
A110	BASKET ASSEMBLY, SPOON	5005ED2003B		1
A120	HARNESS, PWB	6877ED1011A		1
A130	HOSE ASSEMBLY, DRAIN	5215ED3001B		1
A140	RACK ASSEMBLY	3751ED1001G	RACK-L	1

No.	PART NAME	PART No.	SPEC&COLOR	Q'ty
A150	RACK ASSEMBLY	3751ED1002D	RACK-U	1
A155	GUIDE ASSEMBLY	4975ED2002C		1
A156	GUIDE ASSEMBLY	4975ED2002D		1
A160	FILTER ASSEMBLY(CIRC)	6201EC1004F	NOISE FILTER	1
A276	HOSE ASSEMBLY, INLET	5215ED1001A	EUROPE	1
		3W40102H	AUSTRALIA	
F011	SPRING, HINGE	4970ED4004C		2
F013	CONNECTOR ASSEMBLY(MECH)	4933ED3002A	HINGE ROPE	2
F031	SOFTENER ASSEMBLY	3049ED1001A	RISTAL-PJT NATURAL/12	1
F032	PACKING	3920FD4305A	SOFTENER PACKING	1
F034	NUT, DRAWING	1NZZED4003A	SOFTENER NUT	1
F035	CAP, SOFTENER	5006ED3002A	SOFTENER CAP	1
F036	SENSOR ASSEMBLY	6501ED4001A	HALL SENSOR	1
F040	GUIDE ASSEMBLY	4975ED1003A	AIR GUIDE	1
F050	NUT, DRAWING	4020FD3641A	AIR GUIDE NUT	1
F060	GASKET, DOOR	4986FD3643A	AIR GUIDE GASKET	1
F132	TUB GASKET	3920FD3079C		1
F181	ROLLER	4580ED3001A	HINGE ROLLER	2
F191	GUIDE ASSEMBLY	4975ED1002A	WATER GUIDE	1
K001	DISPENSER	4924FD2123A	Without Rinse Indicator	1
		4924FD2123B	With Rinse Indicator	
K002	BRACKET ASSEMBLY	4810FD3805A		2
K003	PACKING	3940FD4149A		2
K010	COVER, FRONT	3122FD1049K	WHITE	1
		3122FD1049M	SLIVER	
		3122FD1049Q	TITANIUM	
K110	BLOWER ASSEMBLY	5835ED2001A		1
K121	BLOWER	5834FD3095A		1
K122	BLOWER, IMPELLER	5834FD3101A		1
K123	BLOWER, IMPELLER	5834FD3100A		1
K124	CONNECTOR(MECH), BLOWER	4932ED3002A		1
K201	BUTTON, CONTROL	5020ED3002A	WHITE	2
		5020ED3002B	SLIVER	
		5020ED3002C	NOBLE INOX	
K204	DECO, KNOB	3806ED3002A		1

No.	PART NAME	PART No.	SPEC&COLOR	Q'ty
K205	SPONGE	3940FD4174D		1
K208	PANEL, CONTROL	3720ED1002A	WHITE, ENGLISH	1
		3720ED1002B	SLIVER, ENGLISH	
		3720ED1002C	NOBLE INOX, ENGLISH	
		3720ED1002D	WHITE, SPAIN	
		3720ED1002E	SLIVER, SPAIN	
		3720ED1002F	NOBLE INOX, SPAIN	
		3720ED1002J	WHITE, GERMAN	
		3720ED1002K	NOBLE INOX, GERMAN	
K209	BUTTON, CONTROL	5020ED3003A	WHITE	1
		5020ED3003B	SLIVER	
		5020ED3003C	NOBLE INOX	
K211	KNOB ASSEMBLY	4941ED3001A	ROTARY KNOB	1
K230	PLATE, CONTROL	3300ED3004A	WHITE, ENGLISH	1
		3300ED3004B	SLIVER, ENGLISH	
		3300ED3004C	WHITE, SPAIN	
		3300ED3004D	SLIVER, SPAIN	
		3300ED3004G	WHITE, GERMAN	
		3300ED3004H	SLIVER, GERMAN	
		3300ED3004J	WHITE, PICTO	
		3300ED3004K	SLIVER, PICTO	
K250	PWB(PCB) ASSEMBLY, MAIN	6871EC1067A		1
K260	LATCH ASSEMBLY	4027FD3621K	WHITE	1
		4027FD3621L	SLIVER	
K262	LATCH, HANDLE	4026ED3002A	WHITE	1
		4026ED3002B	SLIVER	
M001	HOLDER	4930ED2003A		1
M002	DAMPER	4900ED4003A		1
M005	GASKET, SUMP	4986ED3005A		1
M006	SUMP ASSEMBLY	3485ED1001A		1
M008	DAMPER	4900ED3001A		1
M018	GASKET, TUB	4986ED3001A		1
M023	DAMPER	4900ED4002A		1
M024	COVER, GUIDE	3550ED3009A		1

No.	PART NAME	PART No.	SPEC&COLOR	Q'ty
M025	VALVE, CHECK	5220ED3001A		1
M026	MOTOR ASSEMBLY, WM	4681ED3001A	SYNCHRONOUS MOTOR	1
M027	SWITCH, MICRO	3W40025C		1
M028	CAM, SWITCH	4430ED4001A		1
M051	MOTOR ASSEMBLY, PUMP	4681EA2001A		1
M060	PUMP ASSEMBLY, WASHING	5859ED1001A		1
M062	BRACKET, MOTOR	4810ED3003A		1
M070	FILTER ASSEMBLY, STAINLESS	5231ED2001A		1
M080	CASE ASSEMBLY	3111ED2002A		1
M083	THERMISTOR ASSEMBLY	6322FD3671A		1
M086	SWITCH, MICRO	3W40025B		1
M210	VALVE ASSEMBLY, INLET	5221ED1002A		1
M230	POWER CORD ASSEMBLY	6411FD1097A	B-3 TYPE, UK	1
		6411FD1097B	C-4-2 TYPE, SPAIN	
M260	BASE, CABINET	3040ED1002A		1
M270	LEG	4778ED3001A		4